Straight Fabric Display

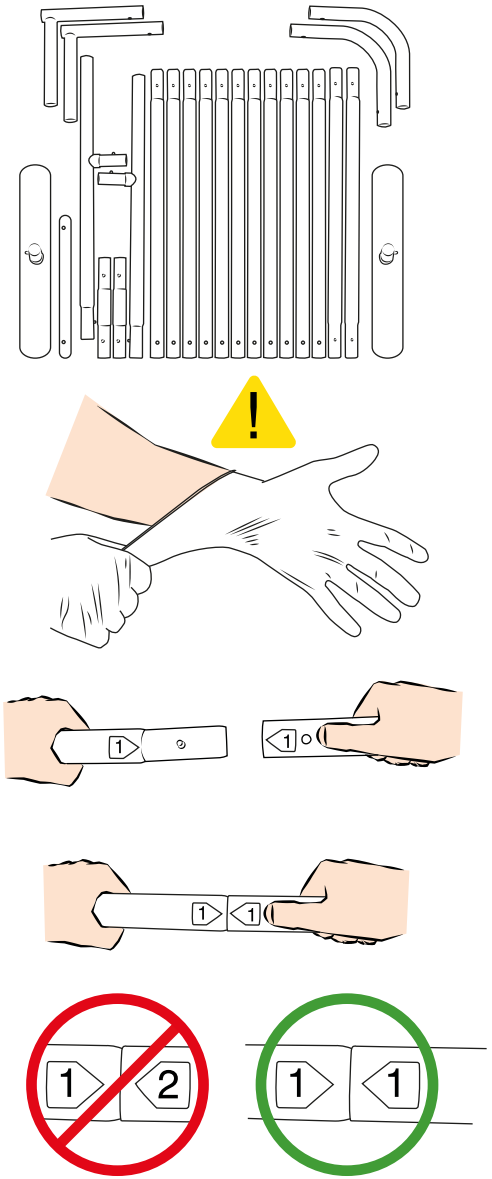

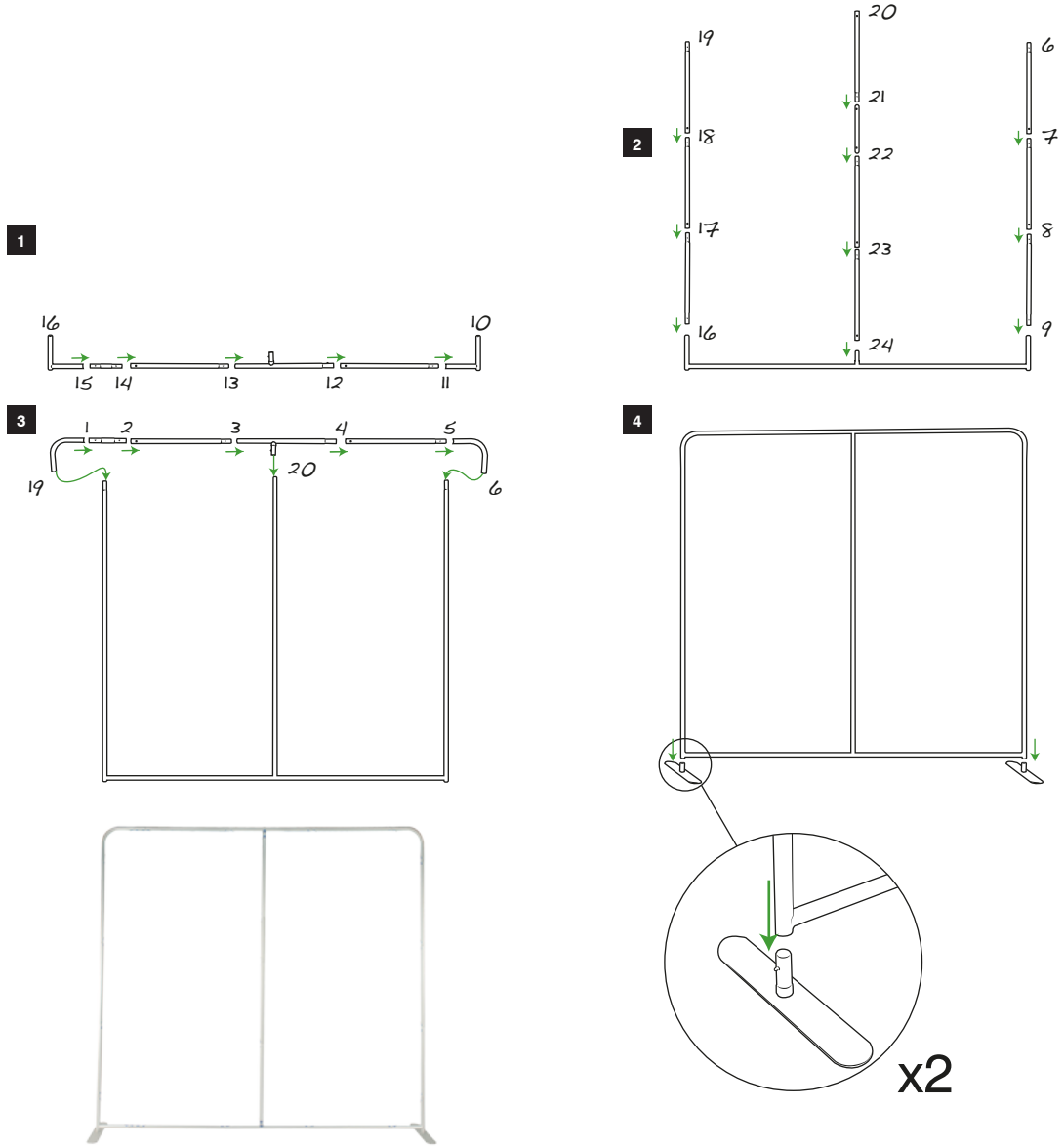

Tel: 0116 2047751

sales@popup-stands-uk.co.uk POPUP STANDS UK, 2 CRANMER STREET, LEICESTER, LE3 0QA www.popup-stands-uk.co.uk

Straight Fabric Display

1

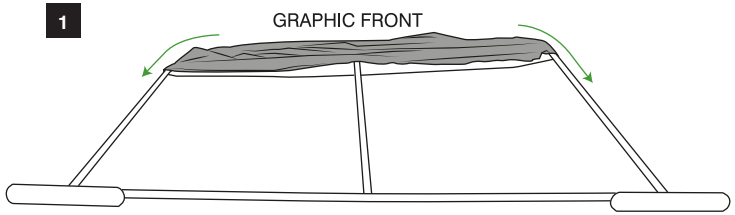

2

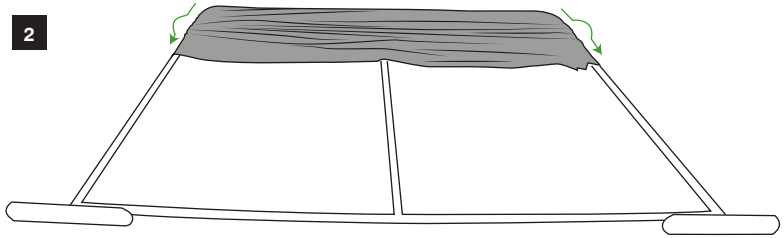

3

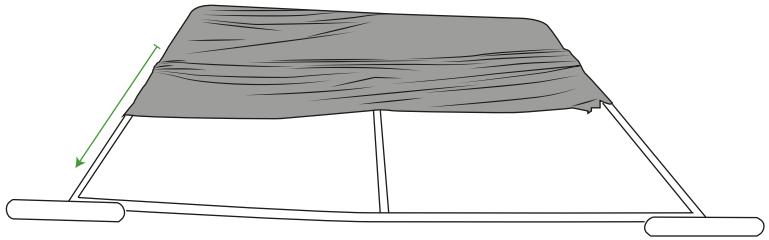

4

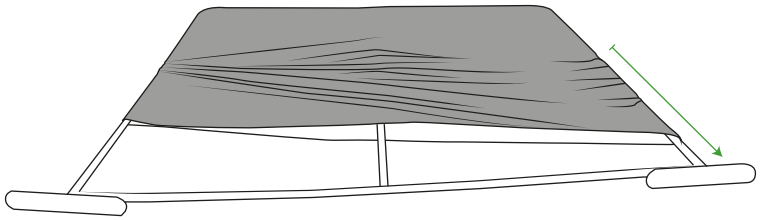

5

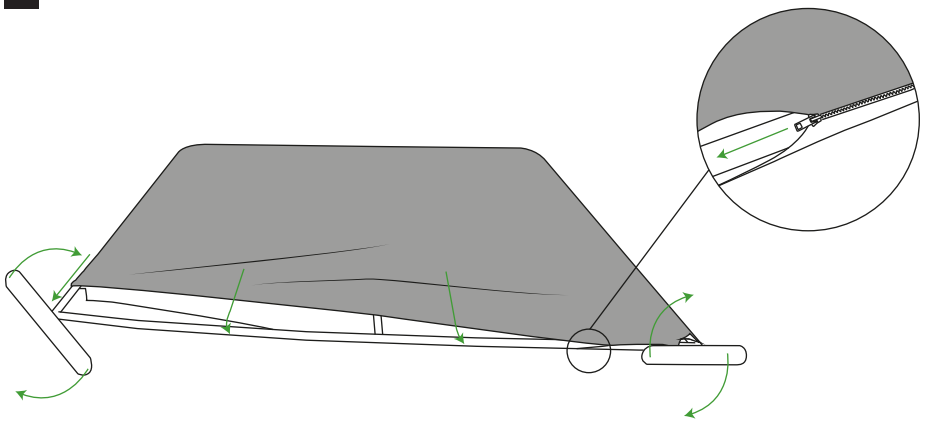

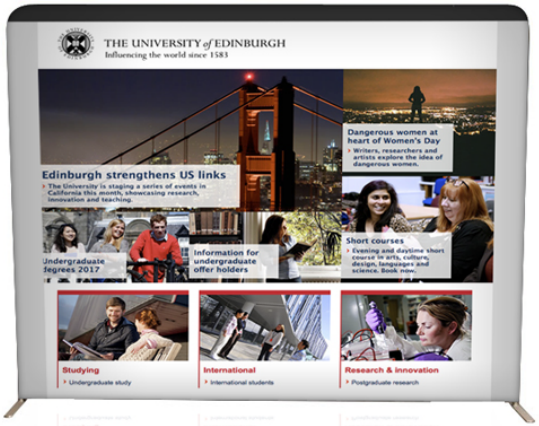

Tel: 0116 2047751

sales@popup-stands-uk.co.uk POPUP STANDS UK, 2 CRANMER STREET, LEICESTER, LE3 0QA www.popup-stands-uk.co.uk